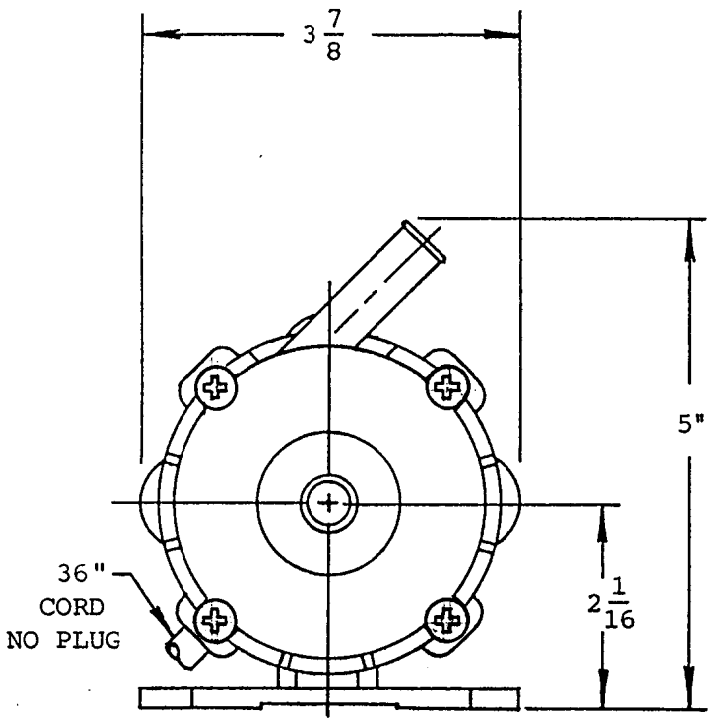

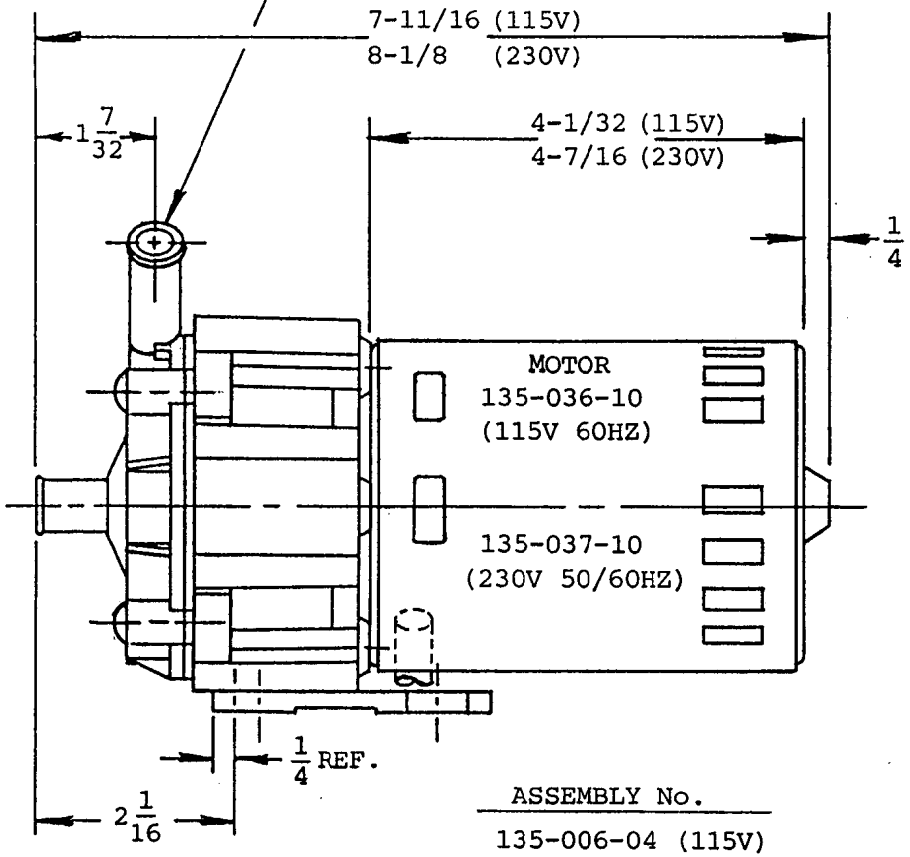

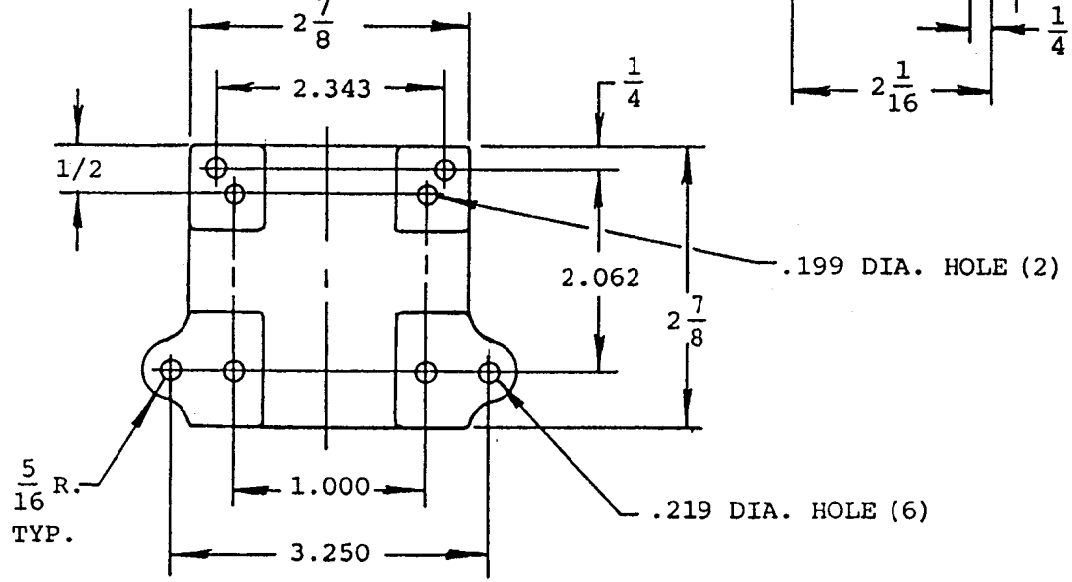

ASSEMBLY No.

135-006-04 (115V)
135-163-03 (230V)

(E)	REDRAWN 7-19-93 J.T.
(F)	WING NUTS (4) REMOVED. ASS'Y NOW USES (4) SCREWS. 7-29-96 J.T.

QTY.	USED ON ASSEM.

MARCH MFG. INC.

1819 PICKWICK AVE. GLENVIEW, IL.

PART NAME PUMP ASSEMBLY MDX-3-1/2		
MOTOR: FASCO		
HEAT TRMT.	SCALE 1/2"=1"	QTY. REQ. 1
FINISH	DRAWN JT/HZ	DATE 7-19-93
UNLESS OTHERWISE NOTED TOLERANCE ON FRACTIONS ± 1/64 TOLERANCE ON DECIMALS ± .005	CHECKED	
	APPROVED	
PART NUMBER 135 SERIES		

THIS DOCUMENT DISCLOSED SUBJECT MATTER IN WHICH MARCH MFG. INC. HAS PROPRIETARY RIGHTS. NEITHER RECEIPT NOR POSSESSION THEREOF CONFERS OR TRANSFER ANY RIGHT TO REPRODUCE OR DISCLOSE THE DOCUMENT, ANY PART THEREOF, ANY INFORMATION CONTAINED THEREIN, OR ANY PHYSICAL ARTICLE OR DEVICE OR TO PRACTICE ANY METHOD OR PROCESS, EXCEPT BY WRITTEN PERMISSION FROM OR WRITTEN AGREEMENT WITH MARCH MFG. INC.